STATE OF RHODE ISLAND AND PROVIDENCE PLANTATIONS
PUBLIC UTILITIES COMMISSION

IN RE: BLOCK ISLAND UTILITY DISTRICT :
RATE CHANGE APPLICATION : DOCKET NO. 4975

COMMISSION'S SECOND SET OF DATA REQUESTS
DIRECTED TO BLOCK ISLAND UTILITY DISTRICT (BIUD)
(Issued April 9, 2020)

2-1. In PUC-1-5, the PUC asked if BIUD plans to provide a spending plan for the Capital Fund-Capitalized Expenditures and Voltage Conversion Fund and a periodic accounting of expenditures from the funds. If not already provided in PUC-1-5, please provide a more detailed explanation of the Voltage Conversion program than was provided in Mr. Wright's testimony along with a more detailed timeline.

RESPONSE:

The voltage conversion project is necessary to increase the capacity of the BIUD distribution system to relieve capacity constraints that currently exist during peak load periods. A voltage and configuration change from 2,400 V Delta to 4,160 Grounded Wye would in effect double the capacity of the distribution system. When voltage is doubled and the load remains the same, the ampacity for that load is reduced by a factor of two.

Although the project has been contemplated for at least ten years, the previous owners did not have the necessary funding. They also did not have the detailed load data to quantify the capacity constraints and justify the expense. In the spring of 2019, BIUD installed a new SCADA system that allows us to track real time load data by individual circuit. During the summer of 2019, BIUD identified two distribution circuits that were at, or over, the capacity limits of the circuit conductors. The chart shown below, which was presented at the 2019 BIUD Annual Meeting held on August 23, 2019 as part of a voltage conversion presentation, details the circuit constraints that exist under peak load.

Circuit	Normal Overhead Conductor Rating (Amps)	2019 Peak	% of Full Capacity
Substation	2000	1256	63%
Airport 1A	225	135	60%
West Side 2A	225	138	61%
New Harbor 3A	170	164	96%
High Street 4A	355	237	67%
Old Harbor 5A	355	414	117%
Corn Neck 6A	225	168	75%

STATE OF RHODE ISLAND AND PROVIDENCE PLANTATIONS
PUBLIC UTILITIES COMMISSION

IN RE: BLOCK ISLAND UTILITY DISTRICT :
RATE CHANGE APPLICATION : DOCKET NO. 4975

COMMISSION'S SECOND SET OF DATA REQUESTS
DIRECTED TO BLOCK ISLAND UTILITY DISTRICT (BIUD)
(Issued April 9, 2020)

The Old Harbor 5A circuit load consistently overloads the 2/0 copper overhead conductor and the 4/0 underground riser cables at the substation. The normal and emergency ratings for these two limiting factors are shown in the charts below:

Cicrcuit 5A Underground Exit Feeder Cables			
	90 C Rating	105 C Rating	2019 Summer Peak
4/0 Copper - 15 kV Insulated/Jacketed Cable in One Conduit (Substation Exit Riser - 200')	250 AMPS	310 AMPS	414 AMPS

Cicrcuit 5A 2/0 Copper Overhead Circuit Conductors			
	75 C Normal Rating	100 C Emergency Rating	2019 Summer Peak
4/0 Copper - Hard Drawn Overhead Conductor in Open Air	355 AMPS	440 AMPS	414 AMPS

Attachment JMW-1 is an engineering briefing dated 10/21/19 which was written by Workplace Safety Solutions Incorporated ("WSSI"). The consulting firm from Williston, VT is helping to study the need, feasibility, construction sequence and construction estimate for the voltage conversion. The report details the 2019 load impacts on the distribution system and documents the circuit capacities and overloads that were experienced by BIUD during the 2019 summertime peak. It also details the voltage conversion considerations that are being considered in our planning.

Attachment JMW-2 is a draft construction schedule and estimate that we are currently working on. The entire project will be done in multiple phases as shown below and in JMW-2, some of which have been started and/or completed:

Phase One: Substation and New Harbor 3A Conversion
Phase Two: Old Harbor 5A Conversion
Phase Three: High Street 4A Conversion
Phase Four: Corn Neck 6A Conversion
Phase Five: West Side 2A Circuit

STATE OF RHODE ISLAND AND PROVIDENCE PLANTATIONS
PUBLIC UTILITIES COMMISSION

IN RE: BLOCK ISLAND UTILITY DISTRICT :
RATE CHANGE APPLICATION : DOCKET NO. 4975

COMMISSION'S SECOND SET OF DATA REQUESTS
DIRECTED TO BLOCK ISLAND UTILITY DISTRICT (BIUD)
(Issued April 9, 2020)

Phase Six: Airport 1A Circuit

The conversion of the substation is dependent on the installation of multiple step-transformers placed on the distribution lines outside the substation that act as a conversion from Grounded Wye back to Delta that will allow for the phased conversion approach. At this same time, a neutral conductor will be installed from the substation to the step-transformers on each circuit.

Once the step-transformers and required neutral conductor are installed, the substation will be converted during a 6-8 hour island-wide outage. The step-transformers will be commissioned on all circuits except for the New Harbor 3A circuit which will also be fully converted on the day of the substation outage. After the conversion, the substation, the New Harbor 3A circuit and all other circuits will be converted down-stream to the step-transformers on the 1A, 2A, 4A, 5A and 6A circuits. This will conclude Phase One and immediately double the capacity of the substation, all underground exit-feeders, the 3A circuit and all other circuits up to the step-transformers.

The location of the step-transformers and the neutral conductor installation is shown in Attachment JMW-3.

After Phase One is complete, each subsequent phase will be completed by installing additional down-stream step-transformers and converting manageable sections of the circuits. The step-transformers will be leap-frogged until the circuit is complete. A neutral conductor will need to be installed on three phase circuits prior to the circuit being converted. Side taps with two conductors will not need a neutral installed. As those side taps are converted, the transformers will be rewired, and one conductor will be grounded to become the neutral conductor.

The voltage conversion will provide other benefits in addition to providing additional distribution system capacity.

- System losses will be reduced because of the higher voltage and the resulting lower circuit ampacity. We have not studied the cost benefit from reducing system losses but any reduction will reduce BIUD's energy purchases, capacity obligations and transmission expenses.

- Power quality will improve. The Delta system utilizes two primary phase conductors to serve each single-phase transformer. A typical single-phase

transformer outage results from loss of one phase, resulting in a "brown-out" condition from half voltage in the home. A Grounded Wye system utilizes one energized phase conductor and one grounded neutral conductor. Most all single-phase outages on a Grounded Wye system result from the loss of the energized phase which results in a complete loss of power and eliminates the possibility of a "brown-out" condition. This improvement in power quality will benefit the BIUD members by extending the life of their electrical appliances.

- The New Harbor 3A conversion will provide adequate capacity to service Champlain's Marina. The marina currently generates its own power during June, July and August using generators that are rated approximately 800 kW. BIUD is not able to serve that load from its existing distribution system. Once the substation and New Harbor 3A circuit are converted, the load can easily be served. The only construction beyond the voltage conversion needed is to extend the 3A circuit approximately ten poles and install a 1,000 kVA transformer at the marina. This cost will be mostly borne by the marina's owner.

The complete voltage conversion will be done over a five to seven-year period. A complete cost estimate to convert the entire island is not yet complete. Based on the engineering grade cost estimate, we anticipate the cost to complete Phase One of the conversion to be $900,000 which includes a 20% contingency. Construction <u>should</u> begin as soon as the fall of 2020, pending BOD approvals and financing.
Prepared by: Jeffery M. Wright, President

STATE OF RHODE ISLAND AND PROVIDENCE PLANTATIONS
PUBLIC UTILITIES COMMISSION

IN RE: BLOCK ISLAND UTILITY DISTRICT :
RATE CHANGE APPLICATION : DOCKET NO. 4975

COMMISSION'S SECOND SET OF DATA REQUESTS
DIRECTED TO BLOCK ISLAND UTILITY DISTRICT (BIUD)
(Issued April 9, 2020)

2-2. In his prefiled testimony on page 24, Mr. Wright indicated that the MDM system went live in September 2018 so we are unable to accurately identify usage by rate class for last year's peak day/hour. Has BIUD reviewed the data collected during the summer of 2019 to compare to the cost allocation proposals in the rate filing to determine if the proposals in the rate filing are reasonable? If so, please explain and if not, please attempt to do so before the hearing and report then.

RESPONSE:

BIUD's 2019 data taken from its MDMS system appears to be accurate and complete. Analysis of the 2019 actual data taken from the day and hour of BIUD's peak (July 20, 2019 Hour Ending 1900) resulted in the following allocations:

MDM kWh Data from BIUD Peak (7/20/19 Hour Ending 1900)			
Residential	1,128	1,204	34.1%
Net Metering	76		
General	271	293	8.3%
Public	22		
Demand	1,826	2,029	57.5%
Public Demand	203		
Total Sales		3,526	
Losses		1,556	30.6%
Total Peak Load		5,082	

This analysis does not consider the 177 residential customer that are transitioning from Demand back to Residential.

Mr. LaCapra performed the following analysis on the COS allocations that he prepared and concluded that the comparison of the 2019 peak data to the COS was reasonable:

STATE OF RHODE ISLAND AND PROVIDENCE PLANTATIONS
PUBLIC UTILITIES COMMISSION

IN RE: BLOCK ISLAND UTILITY DISTRICT :
RATE CHANGE APPLICATION : DOCKET NO. 4975

COMMISSION'S SECOND SET OF DATA REQUESTS
DIRECTED TO BLOCK ISLAND UTILITY DISTRICT (BIUD)
(Issued April 9, 2020)

From Appendix 1 Worksheets p. 3 of 4, we see the calculated contribution to the August peak of 4,831 kW for Residential to be 2,327 kW, for Commercial 391 kW and GS 2,113 kW. This gives the percentage of the classes as:

Residential	48.2%
Commercial	8.1%
GS	43.7%

From here we adjusted for the transfer of 177 customers and 1,427 of metered load from GS to R. Using the coincidence factor (same Appendix sheet) of .517 yields a peak load transfer of 739 kW or 15.2% of the peak load, i.e., we move .152 from R and add it to GS. This gives:

Residential	33.0%
Commercial	8.1%
GS	58.9%

This derivation of 2018 compares reasonably with the 2019 computed contributions to peak of:

Residential	34.1%
Commercial	8.3%
GS	57.5%

Prepared by: Richard LaCapra and Jeffery M. Wright, President

STATE OF RHODE ISLAND AND PROVIDENCE PLANTATIONS
PUBLIC UTILITIES COMMISSION

IN RE: BLOCK ISLAND UTILITY DISTRICT :
RATE CHANGE APPLICATION : DOCKET NO. 4975

COMMISSION'S SECOND SET OF DATA REQUESTS
DIRECTED TO BLOCK ISLAND UTILITY DISTRICT (BIUD)
(Issued April 9, 2020)

2-3. Can the AMI system be used to disconnect and reconnect electric accounts remotely? If so, when is a physical disconnect and reconnect required?

RESPONSE:

Yes, our AMI system can be used for remote disconnects. Several remote disconnect meters are installed and have been used in the past, but we are not remotely disconnecting for non-payment anymore. We perform only physical disconnects and reconnects.

Prepared by: Jeffery M. Wright, President

STATE OF RHODE ISLAND AND PROVIDENCE PLANTATIONS
PUBLIC UTILITIES COMMISSION

IN RE: BLOCK ISLAND UTILITY DISTRICT :
RATE CHANGE APPLICATION : DOCKET NO. 4975

COMMISSION'S SECOND SET OF DATA REQUESTS
DIRECTED TO BLOCK ISLAND UTILITY DISTRICT (BIUD)
(Issued April 9, 2020)

2-4. If the AMI system can remotely disconnect and reconnect electric accounts, are there any rules BIUD has in place regarding disconnection and reconnection for nonpayment?

RESPONSE:

Remote disconnects used for non-payment have not been used since at least February 2017. Our disconnect process involves notifying the member, hanging a door tag in a prominent location and physically pulling/sealing the meter. We do not disconnect remotely at all.

Remote disconnects are advantageous in reducing drive times for utilities with large service territories, but Block Island is so small that we can drive to any meter on the island within ten minutes. There is no advantage for us to remotely disconnect.

Prepared by: Jeffery M. Wright, President

STATE OF RHODE ISLAND AND PROVIDENCE PLANTATIONS
PUBLIC UTILITIES COMMISSION

IN RE: BLOCK ISLAND UTILITY DISTRICT :
RATE CHANGE APPLICATION : DOCKET NO. 4975

COMMISSION'S SECOND SET OF DATA REQUESTS
DIRECTED TO BLOCK ISLAND UTILITY DISTRICT (BIUD)
(Issued April 9, 2020)

2-5. In each of the scenarios of residential bill impacts included in Schedule RLC_3, page 2 of 4, the average residential customer will pay a system charge in at least one month of the year. How many and what percentage of residential customers are expected to pay a system charge in at least one month during the rate year? Please provide the same information for two months.

RESPONSE:
The numbers of residential customer who would pay a system charge would vary each of the summer months. Using the peak month of August, 967 residential customers would pay a system charge in at least one month. This represents a 67.8% average of residential customers who will pay a system charge in at least one month. Using the lowest month of June, 566 residential customers would pay a system charge in at least two months. This represents a 39.7% average of residential customers who will pay a system charge in at least two months.

Prepared by: David G. Bebyn, CPA

STATE OF RHODE ISLAND AND PROVIDENCE PLANTATIONS
PUBLIC UTILITIES COMMISSION

IN RE: BLOCK ISLAND UTILITY DISTRICT	:	
RATE CHANGE APPLICATION	:	DOCKET NO. 4975

COMMISSION'S SECOND SET OF DATA REQUESTS
DIRECTED TO BLOCK ISLAND UTILITY DISTRICT (BIUD)
(Issued April 9, 2020)

QUESTIONS FOR THE HEARING

1. Please provide more explanation about the revenue sharing arrangement.
2. To what extent does budget billing reduce the impact on the price signals of seasonal rates.?
3. In the future, how will the AMI data be used to determine the cost of service?
4. Should there be any review during the rate year of 2018 and 2019 summer peak usage against the cost allocation in this case?
5. Please provide additional clarification on the change in the design of the demand charge.
6. Will AMI be able to be used for demand response in the future?

OVERVIEW- CONVERSION FROM 2.4 KV DELTA TO 2.4/4.16 KV WYE

The main advantage of this conversion will be the reduction of the phase current on each line which will allow additional load to be added or reduce/eliminate existing overloads, improve voltage regulation and reduce I^2R losses (power paid for by BIP but not recovered through rates.) There will be no need to replace existing transformers but they will need to be reconnected at the time of conversion to a new neutral wire that is either currently there or needs to be installed. Existing capacitors and regulators should be able to be reused by reconnecting them into a wye configuration. Since it's unlikely the entire system can be converted at the same time due to the magnitude of the work involved, a set of step transformers that take the new wye at the substation back to a 2.4 KV delta will be required on each circuit not part of the initial conversion. Each circuit could then be converted one at a time or even doing each circuit in phases by moving the steps to allow conversion in phases that match reasonable work resources. It should be noted that the neutral will need to be grounded a minimum of 4 times per mile per NESC requirements and all equipment will need to be connected to ground. The source from National Grid will now have a neutral brought into the substation that will need to be tied to ground through the substation ground grid (assumes that there is an existing ground grid). The introduction of the ground will now allow a phase that gets grounded to have fault current flow so the system will need to be analyzed to make sure that there are reclosers or fuses installed in strategic locations (i.e. all single phase side taps) to limit the size of the outage or reliability could suffer. The use of fast shots on reclosers may be desirable to allow a temporary fault to clear to reduce the number of outages that require a truck to roll. Tree trimming will need to be kept up or reliability could suffer as the new system will only need contact on one phase of the wye instead of two phases of the old delta.

Attached is some information to get some the thought process going and we can discuss in more detail when we get together on the 24th.

AMPACITIES- UG CABLE

Underground cable typically has a normal rating based on its design temperature (older cable had lower temperature ratings such as 70° C while newer cables have a typical rating of 90° C which does allow higher ratings. Attached are some cut sheets of what may be used if new cable is needed and also some ampacity tables (The ampacities are based on a 100% LF, 20′ C earth ambient temperature and an earth RHO of 90 and a 30" burial depth). Two things to note on the tables are that if multiple circuits are installed in the same duct bank then the ratings are reduced since each act as a heat source to each other so I've shown what the ratings are for a circuit that is by itself and then what the ratings are if there a three circuits close together in the same duct bank. Based on our first visit it seems that the cables are generally by themselves so it seems like the one circuit ratings could be used. There is also an emergency rating using 105' C which does allow the cable to carry a higher load for periods of time but the extra heat does degrade the cable and shorten it's life. Some utilities don't allow any overloading for this reason but others use a general rule of thumb in the industry which is not to exceed 100 hours per year and no more than 500 hours in the life of the cable. If any of the cables need to be changed out for capacity reasons a set of 3-1/c 500 MCM Cu 15 kV cables should fit in the existing conduits and not exceed percent fill or create a jam possibility when pulling.

15kV Primary UD EPR Cable

Aluminum or Copper Conductor. EPR Insulation.
Bare Copper Concentric Neutrals.
Low Density Polyethylene Jacket.

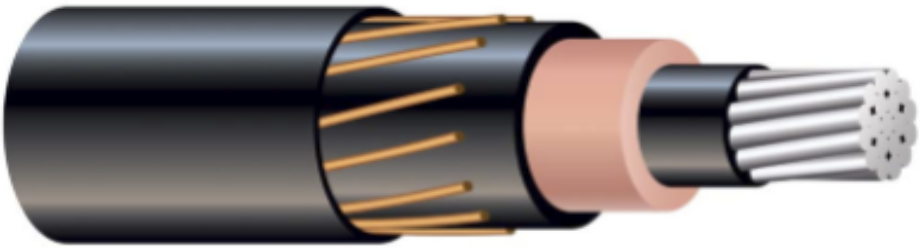

APPLICATIONS

Predominantly used for primary underground distribution in conduit systems; suitable for use in wet or dry locations, direct burial, underground duct, and where exposed to sunlight. To be used at 15,000 volts or less and at conductor temperatures not to exceed 105°C for normal operation.

SPECIFICATIONS

Southwire 15kV Primary UD EPR Cable meets or exceeds the following ASTM specifications:

- B3 Soft Annealed Copper Wire
- B8 Concentric-Lay-Stranded Copper Conductors, Hard, Medium-Hard or Soft
- B230 Aluminum, 1350-H19 Wire for Electrical Purposes
- B231 Aluminum 1350 Conductors, Concentric-Lay-Stranded
- B609 Aluminum 1350 Round Wire, Annealed and Intermediate Tempers, for Electrical Purposes

Southwire 15kV Primary UD EPR Cable is manufactured to the latest edition of the following specifications, and in the order as listed:

- ANSI/ICEA S-94-649
- AEIC CS-8
- UL 1072, When Specified
- RUS 1728F-U1

CONSTRUCTION

The cable is composed of a solid or moisture blocked reverse lay, compressed stranded soft drawn copper, or a solid or moisture blocked reverse lay or unilay compressed stranded 1350-H16/26 aluminum phase conductor, covered by a semi-conducting cross-linked polyethylene strand shield, an ethylene propylene rubber primary insulation, and a semi-conducting cross-linked polyethylene insulation shield. Conductors are available with either 100% or 133% insulation levels. A concentric neutral of bare copper wires and a sunlight resistant, -40°C rated, insulating linear low density polyethylene jacket are applied over the insulation shield. The cable is identified by surface print on the jacket and with the lightning bolt symbol for supply cables indented in the jacket. Red extruded stripes available upon request. A semi-conducting polyethylene jacket is also available upon request.

Southwire®

MADE IN THE USA

Copyright 2013, Southwire Company.
All Rights Reserved

Ampacity Tablets

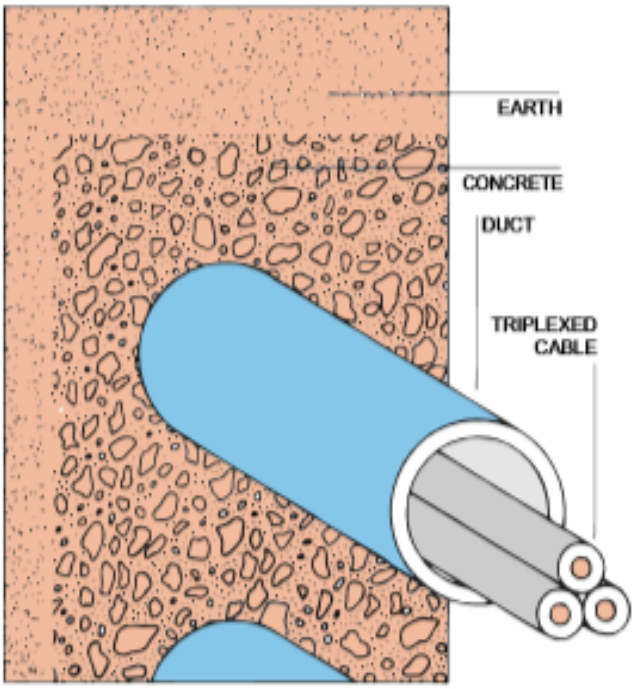

Three single or triplexed cable underground ducts

Closed shield operation. Shields bonded and grounded at multiple points. One triplexed cable or three single conductor cables in a duct. All cables equally loaded and in outside ducts only.

Earth ambient temperature 20°C
Earth thermal resistivity RHO 90
100% load factor
Depth of burial - 30" to top of duct bank with ducts on 7 1/2" centers.

One circuit — three single or triplexed conductors per duct

Table 6-10

Three single or triplexed conductors
Copper — underground ducts

Three single or triplexed conductors
Aluminum — underground ducts

Conductor Size AWG-kcmil	Non-Shielded	Shielded				Non-Shielded	Shielded			
	600-2000 Volts Ampacity	2001-5000 Volts Ampacity		5001-35000 Volts Ampacity		600-2000 Volts Ampacity	2001-5000 Volts Ampacity		5001-35000 Volts Ampacity	
	90° C (194°F)	90° C (194°F)	105°C (221°F)	90° C (194°F)	105°C (221°F)	90° C (194°F)	90° C (194°F)	105°C (221°F)	90° C (194°F)	105°C (221°F)
8	64	64	69	—	—	50	50	54	—	—
6	85	85	92	90	97	66	66	71	70	75
4	111	110	120	115	125	86	86	93	91	98
2	146	145	155	155	165	114	115	125	120	130
1	168	170	180	175	185	131	130	140	135	145
1/0	193	195	210	200	215	150	150	160	155	165
2/0	220	220	235	230	245	172	170	185	175	190
3/0	252	250	270	260	275	196	195	210	200	215
4/0	290	290	310	295	315	226	225	245	230	245
250	319	320	345	325	345	250	250	270	250	270
350	387	385	415	390	415	304	305	325	305	330
500	471	470	505	465	500	372	370	400	370	400
750	585	585	630	565	610	468	470	505	455	490
1000	670	670	720	640	690	546	545	590	525	565

Ampacity Tablets

Three circuits — three single or triplexed conductors per duct

Table 6-11

Three single or triplexed conductors
Copper — underground ducts

Three single or triplexed conductors
Aluminum — underground ducts

Conductor Size AWG-kcmil	Non-Shielded	Shielded				Non-Shielded	Shielded			
	600-2000 Volts Ampacity	2001-5000 Volts Ampacity		5001-35000 Volts Ampacity		600-2000 Volts Ampacity	2001-5000 Volts Ampacity		5001-35000 Volts Ampacity	
	90° C (194°F)	90° C (194°F)	105°C (221°F)	90° C (194°F)	105°C (221°F)	90° C (194°F)	90° C (194°F)	105°C (221°F)	90° C (194°F)	105°C (221°F)
8	56	56	60	—	—	44	44	47	—	—
6	73	73	79	77	83	57	57	61	60	65
4	95	95	100	99	105	74	74	80	77	83
2	123	125	130	130	135	96	96	105	100	105
1	141	140	150	145	155	110	110	120	110	120
1/0	161	160	175	165	175	126	125	135	125	140
2/0	183	185	195	185	200	143	145	155	145	155
3/0	208	210	225	210	225	162	160	175	165	175
4/0	237	235	255	240	255	185	185	200	185	200
250	260	260	280	260	280	203	205	220	200	220
350	313	315	335	310	330	245	245	265	245	260
500	376	375	405	370	395	297	295	320	290	315
750	461	460	495	440	475	369	370	395	355	385
1000	523	525	565	495	535	426	425	460	405	440

Six circuits — three single or triplexed conductors per duct

Table 6-12

Three single or triplexed conductors
Copper — underground ducts

Three single or triplexed conductors
Aluminum — underground ducts

Conductor Size AWG-kcmil	Non-Shielded	Shielded				Non-Shielded	Shielded			
	600-2000 Volts Ampacity	2001-5000 Volts Ampacity		5001-35000 Volts Ampacity		600-2000 Volts Ampacity	2001-5000 Volts Ampacity		5001-35000 Volts Ampacity	
	90° C (194°F)	90° C (194°F)	105°C (221°F)	90° C (194°F)	105°C (221°F)	90° C (194°F)	90° C (194°F)	105°C (221°F)	90° C (194°F)	105°C (221°F)
8	48	48	52	—	—	38	38	41	—	—
6	62	62	67	64	68	48	48	52	50	54
4	80	80	86	82	88	62	62	67	64	69
2	103	105	110	105	115	80	80	86	80	88
1	117	115	125	120	125	91	91	98	90	99
1/0	133	135	145	135	145	104	105	110	105	110
2/0	150	150	160	150	165	117	115	125	115	125
3/0	170	170	185	170	185	133	135	145	130	145
4/0	193	195	210	190	205	151	150	165	150	160
250	211	210	225	210	225	165	165	180	165	175
350	252	250	270	245	265	197	195	210	195	210
500	301	300	325	290	310	238	240	255	230	250
750	365	365	395	350	375	292	290	315	280	305
1000	412	410	445	390	415	336	335	360	320	345

AMPACITIES- BARE OH COPPER

Bare copper wire has a normal rating of 75° C which produces the ampacities shown in the Southwire cut sheet based on the parameters shown at the bottom of the sheet. Generally hard drawn copper is used for OH primary distribution as it has the most strength. Some additional charts are attached that also show an overload ampacity that some utilities allow (up to 100° C) but the danger of allowing the wire to go to the higher temperatures may start to anneal the copper which drops the rated strength significantly as shown in the first cut sheet. The sag of the conductor also has to be considered as these higher temperatures will create additional sag which may contact lower wires on the pole or trees.

Southwire
One Southwire Drive
Carrollton, Ga. 30119 USA

Copyright 2003, Southwire Company.
All Rights Reserved.

®Southwire is a registered trademark
of Southwire Company.

Bare Copper

Size (AWG)	Stranding	Stranding Class	Weight (lbs/1000 ft)	Diameter (mils)		Hard Drawn		Medium-Hard Drawn		Soft-Drawn (Annealed)		Allowable Ampacity+
				Individual Wires	Complete Conductor	Rated Strength (lbs)	DC Resistance (ohms/1000 ft) @20°C	Rated Strength (lbs)	DC Resistance (ohms/1000 ft) @20°C	Rated Strength (lbs)	DC Resistance (ohms/1000 ft) @20°C	
STRANDED												
8	7	B	51	49	146	777	.6663	610	.6629	499	.6408	95
6	7	B	81	61	184	1228	.4191	959	.4169	794	.4030	130
4	7	A, B	128.9	77	232	1938	.2638	1505	.2622	1320	.2534	170
3	7	A, B	162.5	87	260	2433	.2090	1885	.2079	1670	.2010	200
2	7	A, B	204.9	97	292	3050	.1660	2360	.1650	2110	.1578	230
1	7	A	258.4	109	328	3801	.1316	2955	.1309	2552	.1252	265
1/0	7	A, AA	326.1	123	368	4752	.1042	3705	.1037	3221	.1002	310
2/0	7	A, AA	410.9	138	414	5926	.08267	4640	.08224	4062	.07949	355
2/0	19	B	410.9	84	418	6690	.08267	4765	.08224	4024	.07949	355
3/0	7	A, AA	518.1	155	464	7366	.06556	5812	.06522	5118	.06304	410
4/0	7	A, AA	653.3	174	522	9154	.05199	7278	.05172	6459	.04999	480
4/0	19	B	653.3	106	528	9617	.05199	7479	.05172	6453	.04999	480
250	19	A	771.9	115	574	11360	.04400	8836	.04378	7627	.04231	530
250	37	B	771.9	82	575	11600	.04400	8952	.04378	7940	.04231	530
300	19	A	926.2	126	628	13510	.03667	10530	.03648	9160	.03526	590
350	19	A	1080.6	136	679	15590	.03143	12200	.03127	10680	.03022	650
500	37	A, B	1543.8	116	814	22510	.02200	17550	.02189	15240	.02116	810
600	37	A, AA	1852.5	127	891	27020	.01834	21060	.01825	18300	.01763	910
750	61	A, B	2315.6	111	998	34090	.01467	26510	.01459	22890	.01410	1040
1000	61	A, B	3087.5	128	1152	45030	.01100	35100	.01094	30500	.01058	1240

+Ampacity based on 75°C conductor temperature; 25°C ambient temperature; 2 ft./sec. wind in sun.

BARE COPPER				
	Summer Ampacity		Winter Ampacity	
Size	Normal	Emergency	Normal	Emergency
#6 3 Str	130	160	165	185
#6 Solid	125	150	155	175
#4 3 Str	175	215	220	250
#4 Solid	165	205	210	240
#3 7 Str	200	245	250	285
#2 7 Str	230	280	290	330
#2 3 Str	235	290	300	340
#2 Solid	225	275	285	320
#1 7 Str	265	330	335	385
#1 3 Str	275	340	350	395
#1/0 7 Str	310	380	390	445
2/0 7 Str	355	440	455	520
3/0 7 Str	410	510	525	600
4/0 19 Str	480	595	615	700
250	535	665	685	785
300	595	745	770	880
350	660	825	850	970
400	715	895	925	1060
500	820	1030	1065	1220
700	1005	1270	1315	1510
1000	1240	1570	1625	1870

PARAMETERS USED TO CALCULATE AMPACITIES				
	Summer Ampacity		Winter Ampacity	
	Normal	Emergency	Normal	Emergency
Ambient Temp. (°C)	26.7	26.7	4.4	4.4
Bare Wire Conductor Temp (°C)	75	100	75	100
Covered Wire Conductor Temp (°C)	75	85	75	85
Spacer Cable Conductor Temp (°C)	75	100	75	100
Tree Wire Conductor Temp (°C)	75	90	75	90
Wind Speed (Ft/Sec)	2	2	2	2

CONVERSION ISSUES FOR DISCUSSION

- **ROTATION**

  Rotation needs to be determined before the conversion on the substation and on all 6 feeders. The substation rotation needs to be confirmed immediately after the conversion and then as each circuit is picked up with proposed steps the rotation needs to be confirmed to make sure the step connections were all done correctly.

- **PHASING**

  All circuit open points need to have their phasing checked after the conversion to make sure that the step connections were all done correctly.

- **STEP TRANSFORMERS**

  Since conversion of the entire system at one time to a wye system would require significant resources, a set of steps could be installed on each circuit to allow it to remain a 2.4 kV delta circuit until a later date when each circuit could be converted one at a time. There are several ways to connect these steps on the source side (grounded wye, floating wye and delta) with each method having its pros and cons. The eventual decision may be based on input from a Protection & Controls (P&C) Engineer as to the best way to clear a fault downline.

- **Protection & Controls (P&C)**

  The entire substation, diesel interconnection and circuits need to be evaluated by an experienced P&C engineer to make sure everything coordinates including with the National Grid protection back at the source substation. Typically, a wye system has ground trip relays that help provide better fault clearing than just phase over current protection so they will probably recommend that as a minimum.

- **Diesel Generators**

  The diesel generators will need to be reconnected into a wye configuration and phased into the new system and may require additional protection systems.

- **NEUTRAL**

  National Grid will bring a neutral from their substation into the BIPCO substation where it will need to be tied into the substation ground grid (assumes there is an existing ground grid). The substation fence should be tied into the ground grid and it's a common practice to have a buried ground wire outside the fence approximately 3 feet to provide an equipotential zone in case someone is outside and touching the fence during a fault event. As each circuit is converted a neutral will need to be run from the substation for all three phase portions of the circuit. If two circuits share the same pole line they can share the same neutral until they split and then a separate neutral is required for each circuit. During the initial visit it appears that there may

already be extra wires that can be used for a neutral but they were generally not in the typical lower position on the pole so a way to consistently identify which conductor is the neutral needs to be determined so line crews always know which wire is the neutral. For all existing single phase taps there is no need for any additional wires but one of two wires will have to be the designated neutral and identified as such. It could either be moved down on the pole or left on the cross arm with some sort of identification. As each circuit is converted from a delta to a wye, each transformer needs to have the H2 tap moved to the neutral. If there is a cutout/LA on this tap it needs to be removed.

- **CIRCUIT GROUNDING**
  All equipment, racks, cable grounds, riser poles, controls, etc, will need to have an 8′ driven ground at that pole location (controls and LB switch locations should have a second ground rod driven at that location 8’ from the first ground rod or a ground mat installed for worker safety). Also, the NESC requires a minimum of 4 pole grounds per mile to tie the neutral to ground so if there is not enough equipment in a given mile then additional grounds need to be driven to satisfy the NESC. All guy wires also need to get tied into the neutral.

- **REGULATORS**
  Regulators that are currently connected in a delta connection (figure 3 below) will need to be reconnected into a wye (figure 4 below).

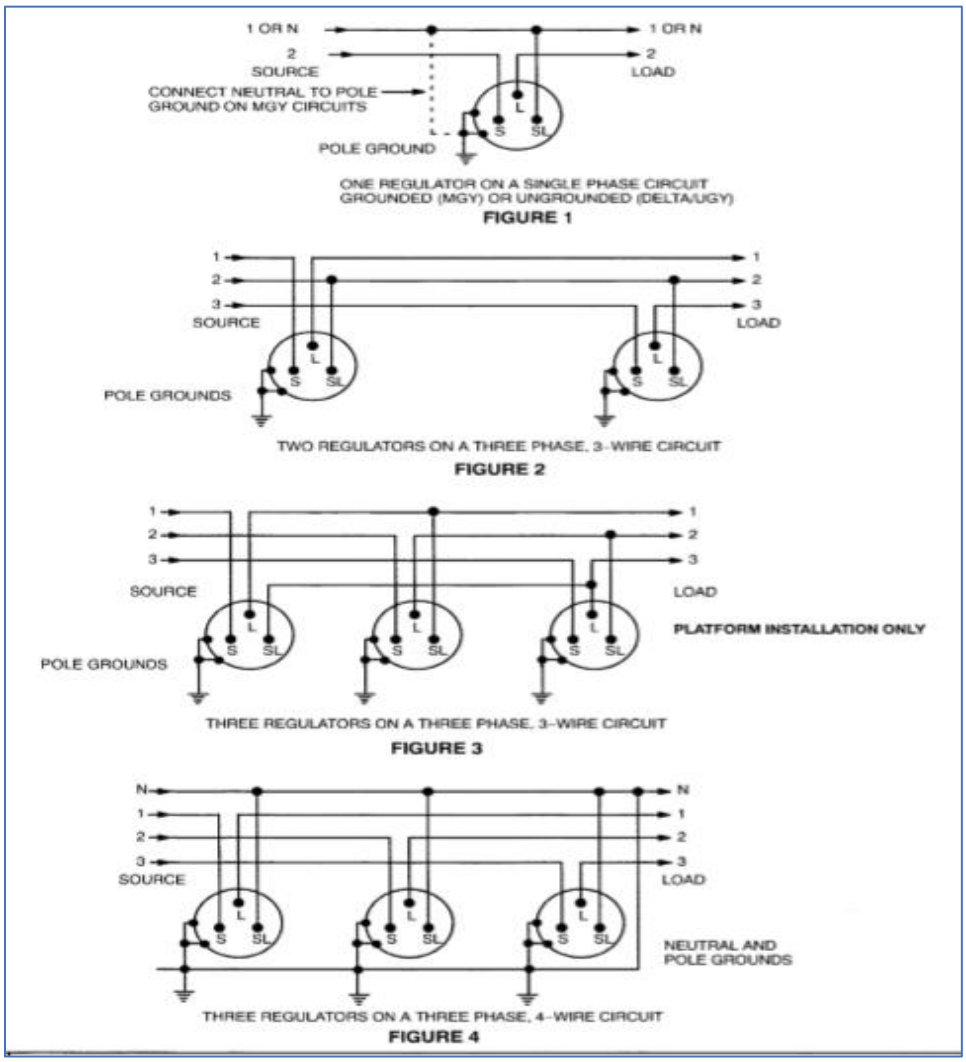

- **CAPACITOR BANKS**
  If there are any capacitor banks on the system, they will also need to be reconnected from a delta to a wye connection.

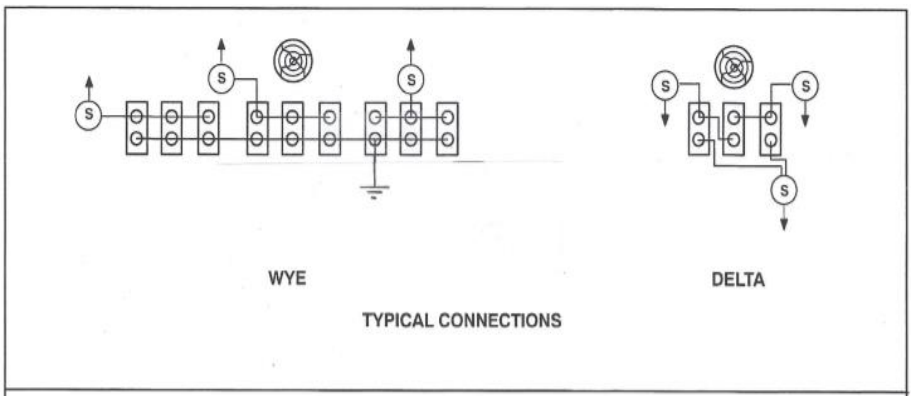

Block Island Utility District
Voltage Conversion Schedule and Cost Summary

Phase/Task	Cost
PHASE ONE - SUBSTATION and NEW HARBOR CONVERSION	$ 765,838
ENGINEERING	
WSSI Project Management Engineering	$ 25,000
Control Point Technologies	$ 28,500
PROCUREMENT	
Distribution Line Reclosers (5)	$ 135,000
Step Transformers (5 Circuits X 3 Each)	$ 77,325
Poles and Hardware	$ 8,350
Pre-Conversion Construction	
Contract Line Worker	$ 102,824
Internal Line Work	$ 20,000
Conversion Constructionand Commissioing	
Contract Line Worker	$ 52,259
Internal Line Work	$ 9,080
BIUD Substation - Contract Techs	$ 25,000
National Grid Substation Techs	$ 22,500
Generation Plant Coversion from 2,400V to 4,160V	
Minton Cat Technicians	$ 75,000
Prime Automation Technicians	$ 120,000
Indirects/Lodging/Freight/Ferry	$ 65,000
PHASE TWO - OLD HARBOR 5A CIRCUIT CONVERSION	
PHASE THREE - HIGH STREET 4A CIRCUIT CONVERSION	
PHASE TWO - CORN NECK 6A CIRCUIT CONVERSION	
PHASE TWO - WEST SIDE 2A CIRCUIT CONVERSION	
PHASE TWO - AIRPORT 1A CIRCUIT CONVERSION	

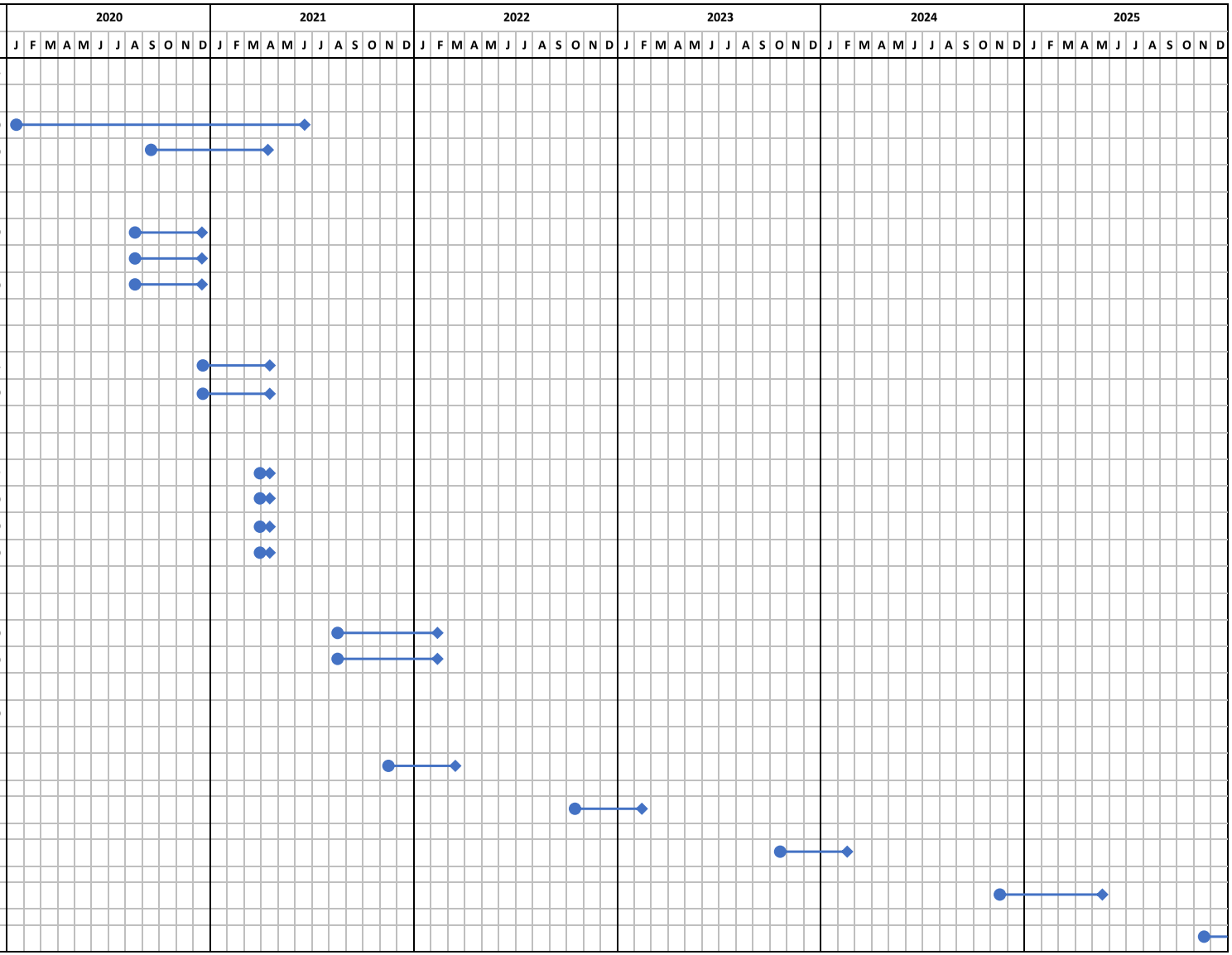

Attachment JMW-2

Block Island Utility District
2400V Delta – 4,160 Wye Voltage Conversion Plan
Neutral Conductor Plan
2/0 Copper Hard Drawn – 7 Strand
Run at least to the Step Transformer Locations on Each Circuit
Attachment JMW-3
000005
CLIF PAYNE
N/F
000387
THE BARRINGTON INN
FIRE #
000388
DAVID CHIEFFO
N/F
000386
Block Island
Volunteer
Fire and
Rescue
Station
TOWN OF NEW SHOREHAM
N/F
TOWN OF NEW SHOREHAM
N/F
New Shoreham
Police
Department
000004
000011
000439
000436
000437
ROBERT ROACH
FIRE #586
Beach Ave
000435
000438
000434
000433
000003
Ocean Avenue
000002
000383
Ocean Avenue
001375
001376
001619
001620
BLOCK ISLAND POWER COMPANY
FIRE #
000431
001378
001377
001380
OLLIE INC
FIRE #101
MIKE LEROY
FIRE #101
001855
000432
HARBOR POND HOME LLC
FIRE #455
BLOCK ISLAND POWER COMPANY
N/F
001381

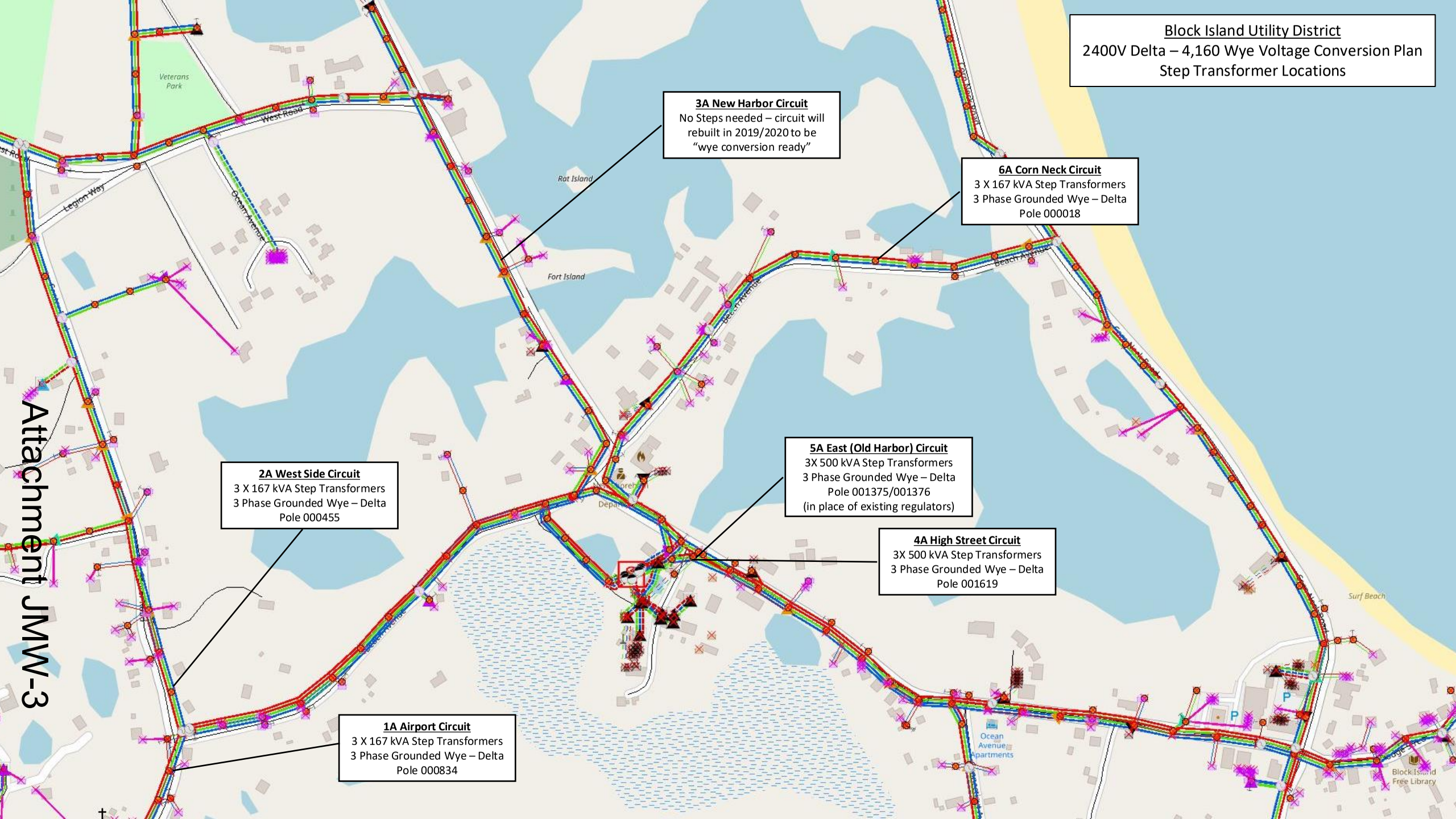

Attachment JMW-3